Name: Eddie Laret	Date: Feb 22	Event: DNC	Track: Perris

Track Conditions

❑ Indoor	❑ Tight	❑ Smooth	❑ Hard Packed	❑ Blue Groove	☑ Wet	❑ Low Bite	❑ High Bite
☑ Outdoor	☑ Open	☑ Rough	☑ Loose/ Loamy	❑ Dry	❑ Dusty	☑ Med Bite	❑ Other

Front Suspension

Ride Ht	28mm
Camber	1.5
Toe	1
Sway Bar	2.3

Notes: Hagoth 4 deg KPI knuckles, HB universals and out drives. moved the ESC behind the servo.

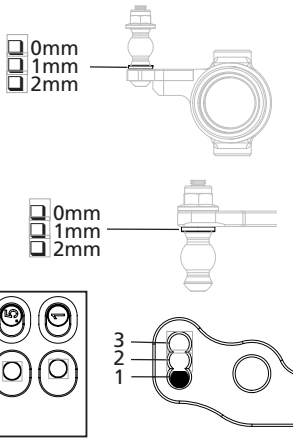

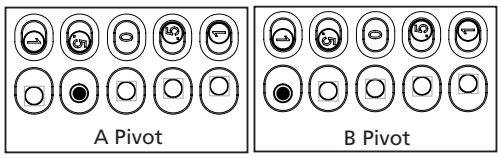

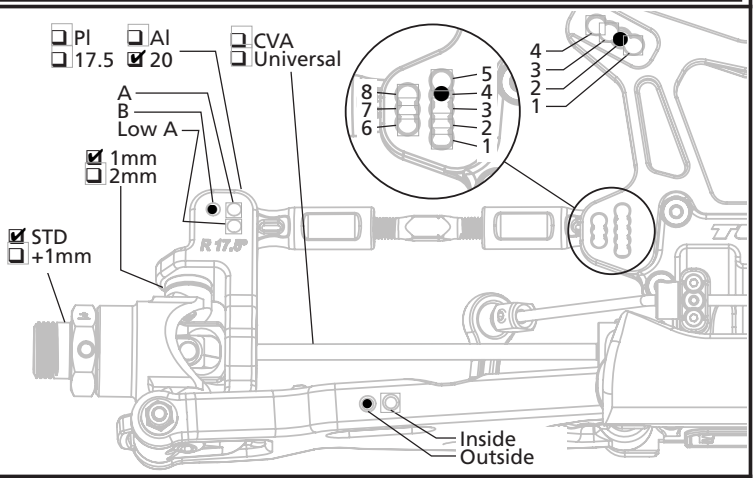

Rear Suspension

Ride Ht	27mm
Camber	2.5
Sway Bar	2.5mm

Notes: Apexx eng rear hub, HB outdrive and universal, LIT C & D block, Move the r 2mm forward

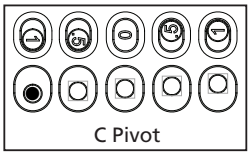

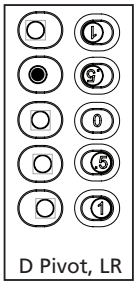

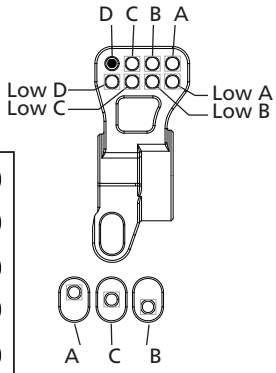

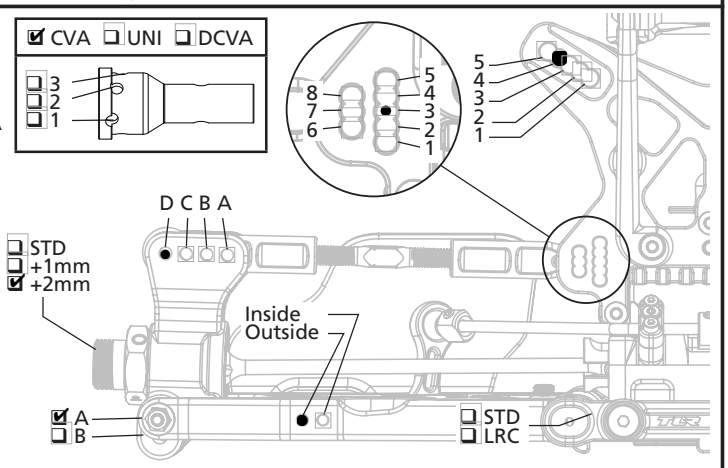

Chassis

Differentials

	Front	Center	Rear
Fluid	7k	5k	3k
Pins	☑ AL ❑ STL	☑ AL ❑ STL	☑ AL ❑ STL
Case	❑ STD ☑ HD	❑ STD ❑ HD	❑ STD ☑ HD

Wing	
Brand	J&T bearing co.
☑ Riser	10mm
☑ Wicker Bill	
☑ FWD ❑ Back	

Electronics

Radio	M17	Servo	MKS 575
ESC	HW SCT	Battery	GEN ace 6k LP
Motor	HW 2100kv	Pinion/Spur	
Initial Brake	stk	Drag Brake	0
Thro Prof	stk	Timing Adv	stk
Thro Expo	0	Steering Expo	0

Shocks

	Front	Rear
Shock Type	❑ Bladder ❑ Re Bladder ☑ Emulsion ❑ Vented	❑ Bladder ❑ Re Bladder ☑ Emulsion ❑ Vented
Shaft Dia	❑ 3.5 ☑ 4.0	❑ 3.5 ☑ 4.0
Piston	MIP BYPASS 7x1.2-1x1.4	MIP BYPASS 7x1.2-1x1.4
Oil	37.5	32.5
Spring	HB Gld	HB Blu
Stroke	BYPASS VALVE CLR	BYPASS VALVE BLU
Droop	29mm	24mm

Tires
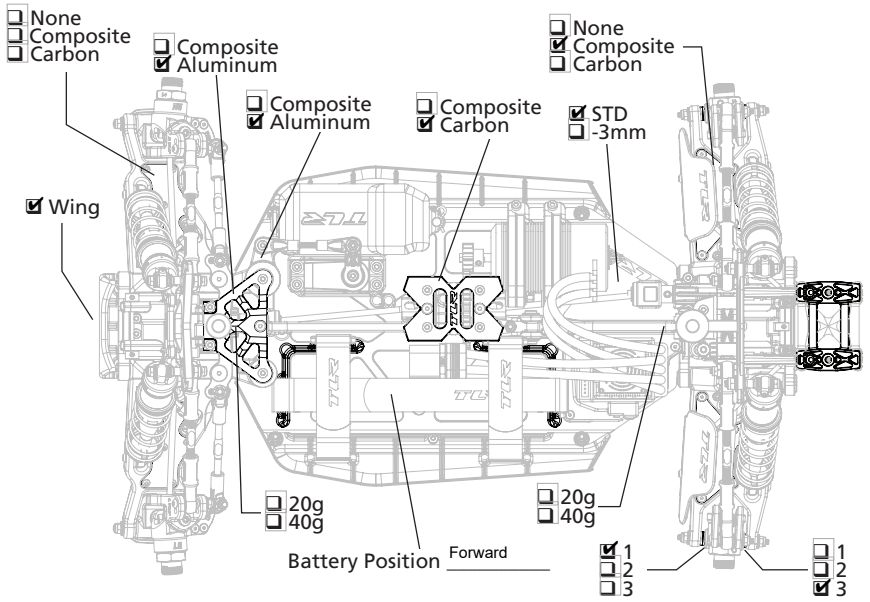
	Front	Rear
Brand	LUGZ	LUGZ
Tread	Protoz	Protoz
Compound	LWSS	LWSS
Insert	BLK	BLK
Sauce	no	no