Primary Gear Installation Instructions

Covers Part #5396X

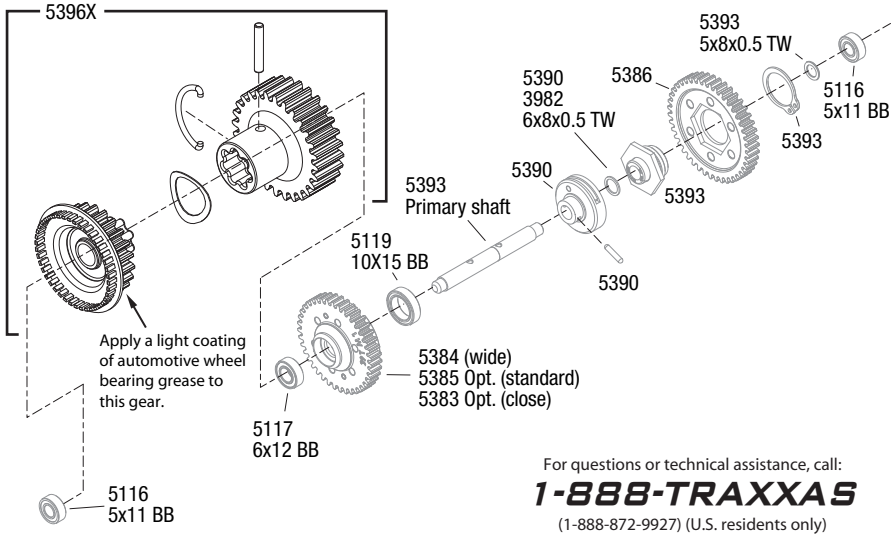

For questions or technical assistance, call:

1-888-TRAXXAS

(1-888-872-9927) (U.S. residents only)
E-mail: support@Traxxas.com

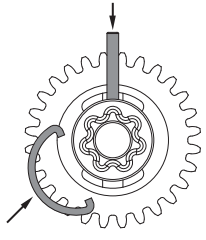

1. Align the FWD primary gear with corresponding hole in the primary shaft. Insert the 2x11.8mm pin.

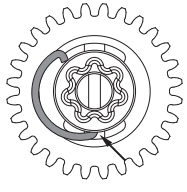

2. Place one end of the pin retaining clip into the pin hole. Begin to squeeze the pin retainer over the gear hub with pliers.

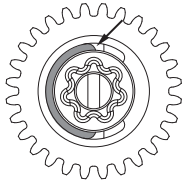

3. Continue squeezing the pin retainer into place until it snaps against the 2x11.8 pin on both sides.

www.TRAXXAS.com

Traxxas, 1100 Klein Road, Plano, TX 75074, Phone: 972-265-8000, Fax: 972-265-8011

Form 5396XADDM Rev 051216