Billing Boats®

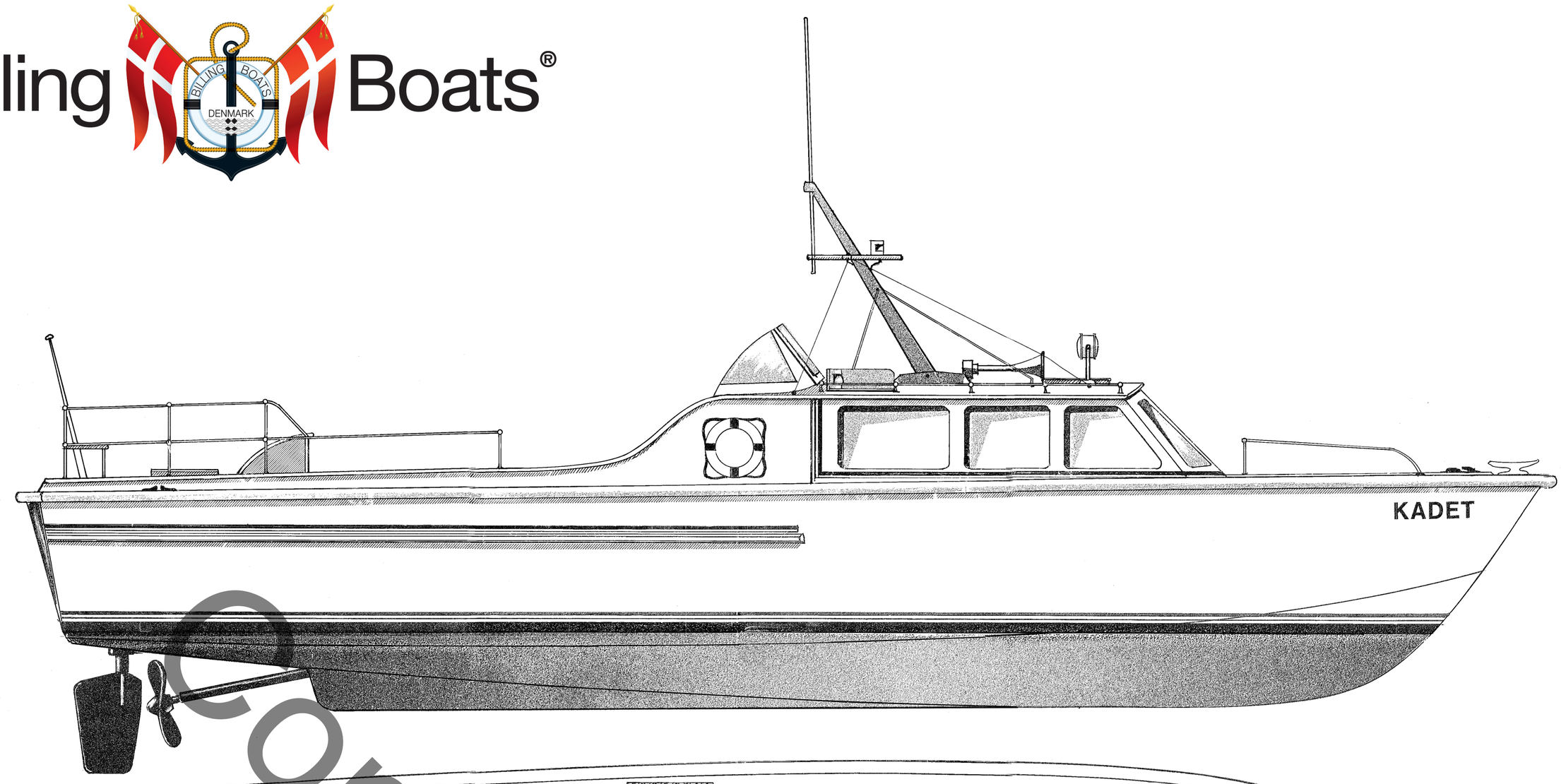

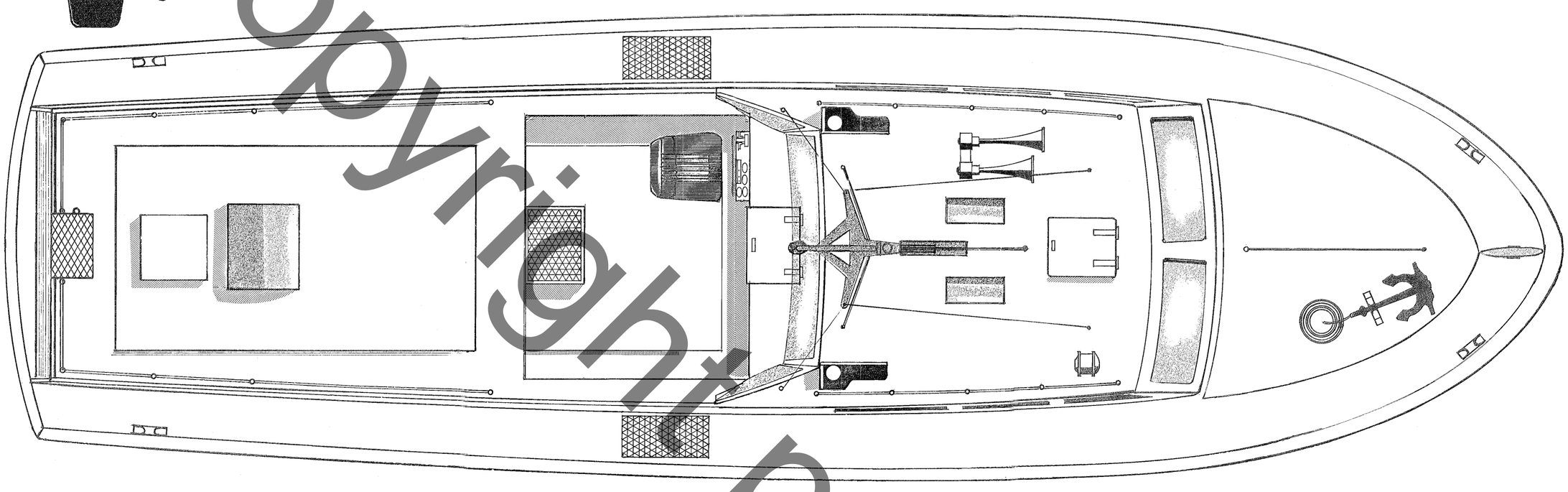

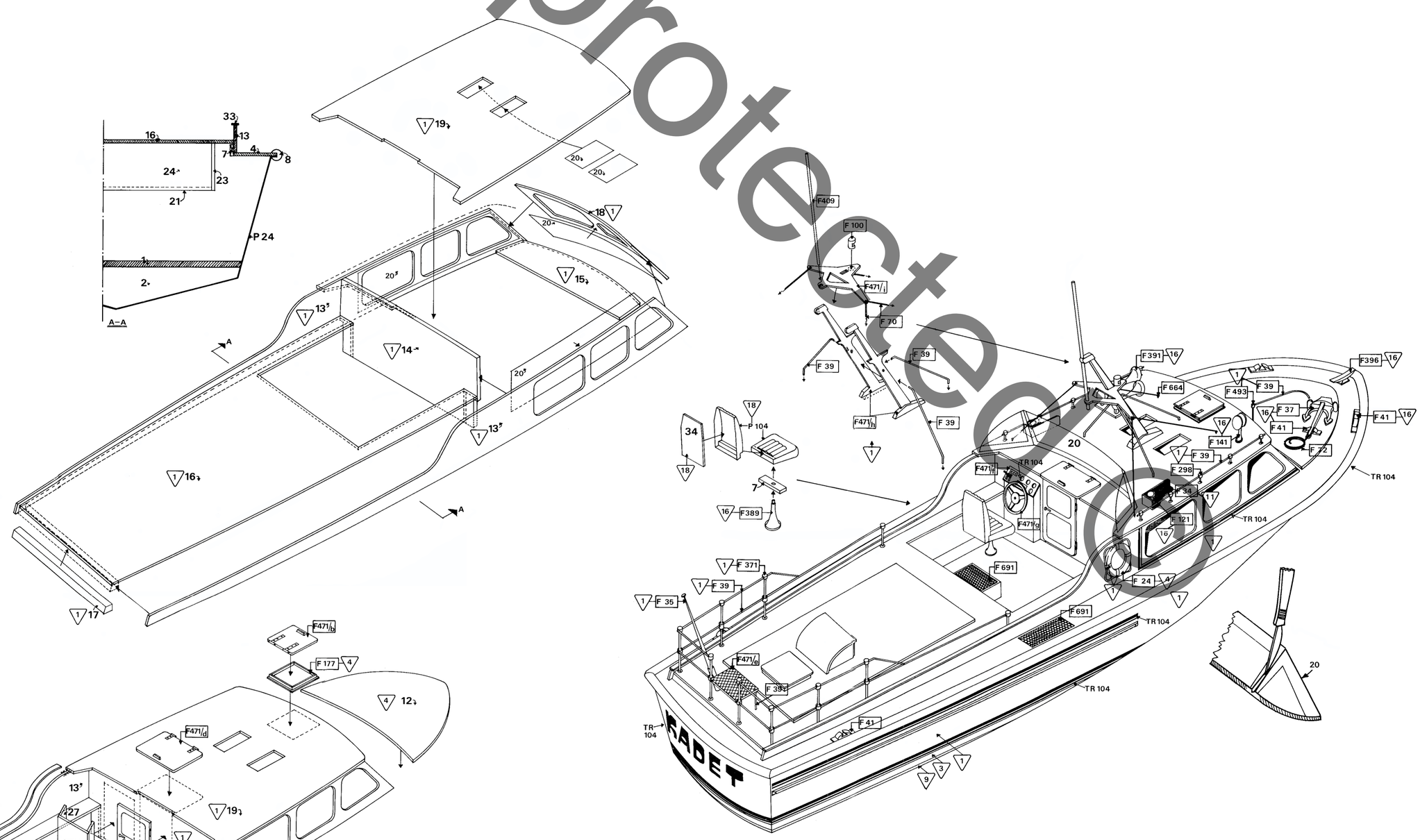

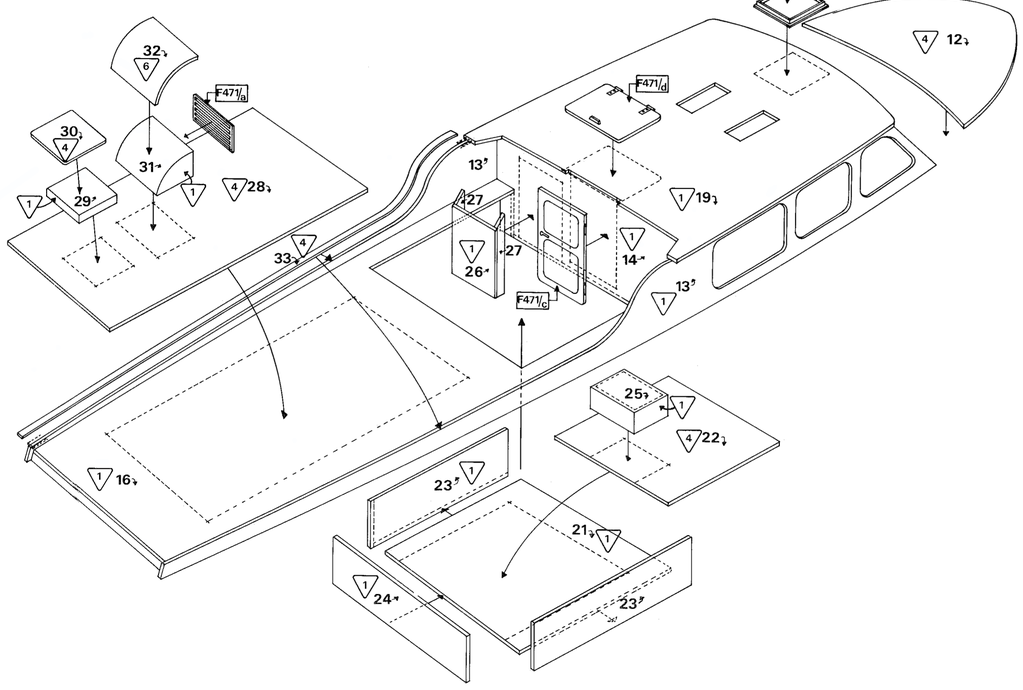

Drawn by:	K.B.	Billing Boats - Denmark
Date:	08.10.15.	
Scale: No Scale	**Kadet „566„** *General Drawing*	Drawning no. 50-50029